BRYAN / COLLEGE STATION

UNIFIED DESIGN GUIDELINES

~~2012~~ 2016

Streets and Alleys

Sentences and/or paragraphs that are double underlined indicate revisions that were made from the ~~2009~~ 2012 manual.

Table of Contents

GENERAL 1
Submittal Requirements 1
Special Designs 1
STREET CLASSIFICATIONS 2
GEOMETRIC CRITERIA 2
Design Vehicle 2
Design Speed 2
Pavement and Lane Width 2
Horizontal Alignment 3
Vertical Alignment 3
INTERSECTION DESIGN 4
Minimum Length and Additional Right-of-Way for Turn Lanes at Intersections 5
MEDIANS 5
FLARED SECTIONS (“Elbows”, “Knuckles”, “Eyebrows”) 6
SIDEWALKS 6
PAVEMENT STRUCTURE 7
CURBING 7
STREET CROWNS 7
ETJ STREETS 8
ENTRANCE ISLANDS 8
SIGNAGE 8
Regulatory Signage 8
Street Name Signs 8
Decorative Signage 8
Other Signs 8
Foundations 8
PAVEMENT MARKINGS 9
Crosswalks 9
Stop and Yield Lines 10
STREETSCAPE 10
Handrails 10

Street Furniture 10
Brick Pavers 10
Patterned Colored Concrete 11
GATED NEIGHBORHOODS 11
STREETLIGHTS 11
BICYCLE FACILITIES 11

List of Tables

Table I – Minimum Length of Right-Turn 6
Table II – Required Right-of-Way at Intersections 6
Table I~~I~~I – Minimum Length of Left-Turn Lanes ..... ~~5~~7
Table ~~II~~IV - Pavement Markings And Signage ..... ~~9~~10
Table ~~III~~V – Minimum Geometric Design Criteria for New Construction ..... 1~~4~~2
~~Table IV – City of College Station Refined Right-of-Way ..... 13~~
Table V~~I~~ – Street Classification Definitions ..... ~~14~~15
Table VI~~I~~ – Minimum Geometric Criteria for Stopping Sight Distance ..... ~~15~~16
Table VII~~I~~ - Minimum Geometric Criteria for Horizontal Curvature ..... ~~16~~17
Table VIII~~I~~ – Minimum Pavement Thickness Criteria ..... ~~17~~18

List of Figures

Figure 1 – Minimum Length for Right and Left –Turn Lanes and Required Right-of-Way at Intersections 6
Figure ~~1~~2 – Residential Street Sections 18
Figure ~~2~~3 – Collector Street Sections 19
Figure ~~3~~4 – Arterial Street Sections 20
Figure 5 – Median Turn Lane Diagram 21
Figure 6 – Bike Lane Diagram 21
Figure ~~4~~7 – Single Unit Turning Design Template ..... 22~~1~~
Figure ~~5~~8 – WB-50 Turning Design Template ..... 23~~2~~
Figure ~~6~~9 – Passenger Turning Design Template ..... 24~~3~~

Figure ~~7~~10 – Fire Ladder Truck Turning Design Template.....24
Figure ~~8~~11 – Clearance Dimensions for Composite Vehicles 25
Figure 12 – Corner Clearance 26
Figure 13 – Utility Corridor 27

GENERAL:

The purpose of this manual is to establish basic guidelines and certain minimum criteria for the design of streets and thoroughfares in the City. It is intended to be used by the city staff and private consulting engineers for all new street construction and improvements to existing streets. Unusual circumstances or special designs requiring exception from the standards in this manual must be approved by the City Engineer.

The criteria outlined in this manual are also intended to be used in conjunction with the Cities' Unified Technical Specifications.

The geometric design policies contained in this manual are intended to provide a reasonable degree of safety to users of the public rights-of-way in normal weather and traffic conditions. The minimum design criteria for pavement structure are intended to produce streets having a useful life expectancy of at least 20 years with reasonable expenditures for maintenance and repair.

Submittal Requirements

The design engineer shall submit the following information with all street designs:

- Plan and profile sheets containing all information necessary to review, construct and inspect the proposed improvements. This includes, but is not limited to, pavement markings, sight triangles, and signs on all roads and facilities. Topographical information outside of right-of-way should be provided where the information is available. For arterial streets, the design speed must be indicated for all horizontal and vertical curves.
- Drainage report in accordance with the City's Drainage Design Guideline Manual.
- Erosion Control Plan (project limits)
- Traffic Control Plans detailing the safe and efficient operation of traffic through the work zone during construction. These plans shall be prepared in accordance with the latest edition of the Texas Manual on Uniform Traffic Control Devices (TMUTCD). The City requires traffic control plans be sealed by a licensed engineer.
- ~~Certification that plans meet all requirements except where noted.~~
- Pavement marking plans shall be developed for all roads and facilities in accordance with TMUTCD.
- Certification that plans meet all requirements except where noted.
- All engineering documents required to be submitted to the City for Review (i.e. Reports, Construction documents) shall be complete, conform to local, state, and federal regulations, and bear a seal of a Professional Engineer with Signature and date unless the proposed

improvements are below the threshold specified in the Texas Board of Professional Engineers.

Special Designs

The City Engineer may, upon request, approve an alternative design, unusual circumstance, or construction methodology that differs from the requirements in this manual on a case by case basis if the City Engineer determines that: (1) the alternative design or construction methodology is equivalent to, or superior to, the methodology required in this manual, and (2) the alternative design or construction methodology is sufficient to ensure public health and safety. For unusual circumstances or special designs not covered in this manual refer to the latest edition of the Institute of Transportation Engineers/Congress for the New Urbanism (ITE/CNU) – Designing Walkable Urban Thoroughfares: A Context Sensitive Approach and the National Association of City Transportation Officials (NACTO) – Urban Streets Design Guide; Urban Bikeway Design Guide; Transit Street Design Guide. ~~American Association of State Highway and Transportation Officials (AASHTO), "*A Policy on Geometric Design of Highways and Streets*".~~

STREET CLASSIFICATIONS:

The City has adopted a functional street classification system, which basically categorizes all streets as rural, residential, collector and arterial streets. Table ~~III~~ V defines the design criteria for all proposed streets by classification which are shown on Figures ~~1~~ 2, ~~2~~ 3 and ~~3~~ 4. For classification of existing and proposed streets refer to Table ~~I~~VI.

GEOMETRIC CRITERIA:

The elements utilized in this manual to establish engineering design criteria are based on design vehicles traveling at design speeds over specified pavement widths. These elements then relate to design guidelines for horizontal curves, vertical curves, and the use of super-elevation. Intersection controls, driveway locations and many other factors may affect the design as well.

Design Vehicle

Two (2) design vehicle configurations are used to establish curve and intersection design controls as listed in the tables within these Guidelines. The characteristics of these vehicles are shown in Figures ~~4~~ 7 and ~~5~~ 8. For additional information, Figure ~~6~~ 9 represents passenger car configurations for off-street parking. Figure ~~7~~ 10 represents the City's Fire Services ladder fire truck.

Design Speed

Design speed is the designated speed used to determine curvature, super-elevation and sight distance criteria. The minimum design speeds for the various street classifications and widths are shown in the tables within these Guidelines.

Pavement and Lane Width

Refer to Table ~~III~~ V for appropriate lane and pavement widths.

Where bicycle lanes are provided, they shall be constructed per Figures ~~2~~ 3 and ~~3~~ 4. The bike lane shall be delineated by a continuous painted white stripe. The bike lane symbol (as designated in the TMUTCD) shall be located immediately after each intersection to inform turning motorists of the restricted nature of the lane.

Horizontal Alignment

The criteria for horizontal alignment are intended to provide safe and comfortable vehicle operations at normal travel speeds, accommodate access to adjacent properties, and provide adequate operating sight distances.

- **Horizontal Curves -** Minimum radii of curvature for the different street classifications and design speeds are shown in Table VII. These are based on free flowing traffic consisting of typical automobiles operating under poor weather conditions. Curve design on residential streets and thoroughfares should also consider intersections, bridges, and locations involving a high number of turning movements and topographic conditions.
- **Horizontal Tangents -** Horizontal curves shall be separated by tangents. Refer to Table VIII for minimum tangent calculations for all street classifications.
- **Transitions -** Transitions from a larger street section to a smaller section or vice versa shall be in accordance with TMUTCD.

Vertical Alignment

The criteria for vertical alignment are intended to provide safe and comfortable vehicle operations at normal travel speeds, accommodate access to adjacent properties and provide adequate storm drainage surface flows.

The minimum grade for streets with curbs and gutters is 0.6%. Valley gutters shall be in accordance with the B/CS Drainage Design Guidelines – Section 6.

The flared gutter grade is often less than the street centerline grade. Therefore, flowline elevations are required in plan view for flared gutter

grades at maximum 25 foot spacings, providing for the minimum gutter grade of 0.6%.

The maximum street grade for alleys and residential streets is 10%. The maximum grade for all other streets is 6%. Steeper grades may be approved by the City Engineer for short distances where required by topographical features or restricted alignment.

At intersections, the grades of the intersecting streets should be not more than plus or minus 2% within the first twenty-five feet of the intersecting curb line to provide a safe approach sight distance and accessible routes per the Texas Accessibility Standards (TAS) and PROWAG and be compliant with ~~the~~ Americans with Disabilities Act (ADA). In unusual circumstances, approach grades of up to 8% on one of the intersecting streets may be considered by the City Engineer.

- **Vertical Curves -** When the algebraic difference in intersecting longitudinal street grades exceeds one of the following,
  - 1.0% <= 30mph (Residential)
  - 0.8% <= 40mph (Collector)
  - 0.5% <= 55mph (Arterial)

  a parabolic vertical curve is required. The length of vertical curves will be determined by the minimum safe stopping distance for the specified design speed and is calculated by the formula:

  $$L = KA$$

  where : L is the length of vertical curve in feet

  A is the algebraic change in longitudinal grade expressed in percent (%)

  K is a constant which can be found in Table VII

- **Super-Elevation -** Super-elevation shall be designed for arterial streets using the following formulas:

  $$e = \frac{V^2 - f}{15R} \quad \textbf{or} \quad R = \frac{V^2}{15(e+f)}$$

  where: e = rate of super-elevation (feet per foot)
  (max value = 6%)

  V = vehicle design speed (mph)
  (Use 55 mph for major arterials, 45 mph for minor arterials)

  f = side friction factor
  (Use f = 0.130 for V=55 mph)
  (Use f = 0.145 for V=45 mph)

R = radius of curve (feet)

INTERSECTION DESIGN:

Street intersections should normally be at right angles and on centerline tangents. The minimum curb return radii for all right angled intersections shall be 25 feet measured from the face of curb. Sight distances for right-angled intersections shall match the safe stopping sight distances listed in Table VI.

In the event that an intersection angle varies from 90°, it shall vary by no more than 15°, and each curb return radius shall be set using the WB-50 design vehicle shown in Figure ~~5~~ 8 with wheels clearing the curb face by 2 feet.

For offset intersections refer to the City of Bryan's Land and Site Development Ordinance or the City of College Station's Unified Development Ordinance. Street spacing shall comply with the driveway spacing as outlined in the respective documents listed above.
The gutter and centerline grades of intersecting streets should be set so as to produce no more than a 2% change in grade in any direction of vehicular travel across an intersection. Storm drainage inlets shall be located outside of the intersection curb returns and should be designed to minimize the volume of storm water entering an intersection.

Intersections shall also have adjacent visibility triangles kept free of obstacles as outlined by the latest edition of AASHTO's "*A Policy on Geometric Design of Highways and Streets*". Obstacles prohibited include vegetation, entry signage, structures, buildings, etc. Public use facilities required to be at intersections such as fire hydrants, traffic signage, utility structures, etc. are exempted.

Additional design information and details shall be as published by AASHTO.

Minimum Length And Additional Right-Of-Way For Turn Lanes At Intersections:

Additional right of way will be required at intersections of arterials with collectors and other arterials to allow for right turn lanes and/or dual left turn lanes. Additional right of way may be required at any intersection to provide sight distance.

Figure 1 illustrates the minimum length for right and left-turn lanes and required right-of-way and at intersections. Table I indicates the total length required for turn lane taper, deceleration, and storage by roadway functional class.

Right turn lanes shall be required at all major intersections. Roadway intersections with minor collectors and local streets require engineering judgement to determine if a right-turn lane is required. If it is determined that there are greater than 40 right turns per hour, an additional 14 feet of right-of-way will be required, as indicated in Table II.

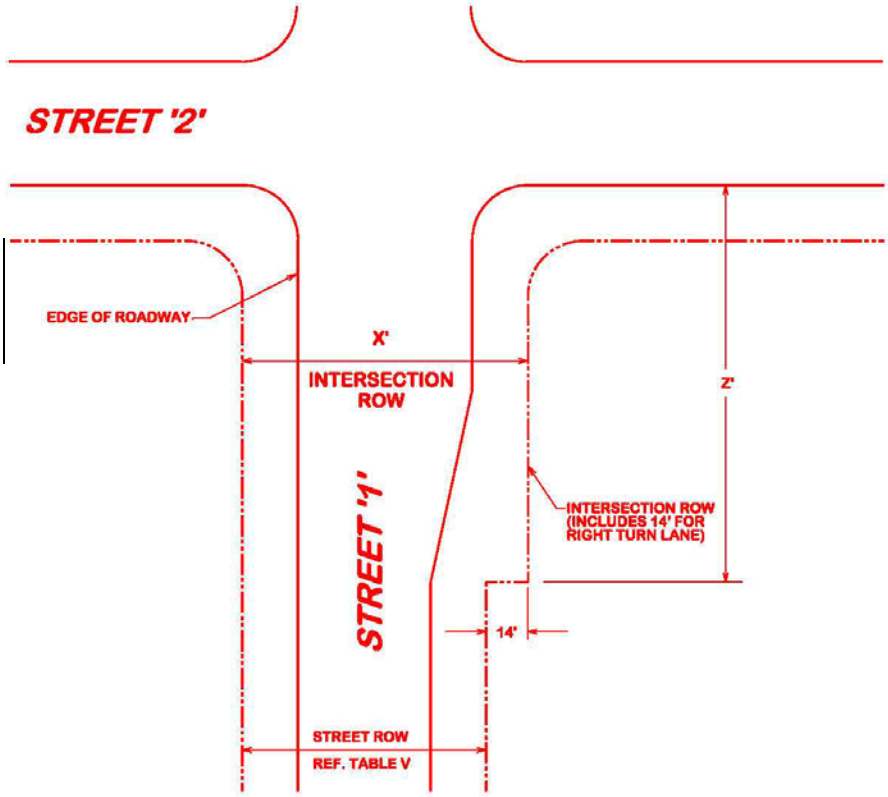

TABLE I MINIMUM LENGTH OF RIGHT TURN - (Z')	
MAJOR ARTERIAL	465 FT.
MINOR ARTERIAL	390 FT.
MAJOR COLLECTOR	255 FT.
MINOR COLLECTOR	200 FT.
LOCAL	200 FT.

FIGURE 1

TABLE II
REQUIRED RIGHT-OF-WAY WIDTH AT INTERSECTIONS – (X')

		STREET '2'				
		MAJOR ARTERIAL	MINOR ARTERIAL	MAJOR COLLECTOR	MINOR COLLECTOR	LOCAL
STREET '1'	MAJOR ARTERIAL	144'	144'	144'	144'	*130' (144')
	MINOR ARTERIAL	119'	119'	119'	119'	*105' (119')

	MAJOR COLLECTOR	94’	94’	94’	*80’ (94’)	*80’ (94’)
	MINOR COLLECTOR	74’	74’	*60’ (74’)	*60’ (94’)	*60’ (94’)

MEDIANS:

The use of medians will be determined either by the City or by the developer. They shall not be less than 15 feet in width as measured from back-of-curb to back-of-curb. Sheltered left turn lanes must be at least 10 feet in width with minimum ~~storage~~ length ~~and approach taper~~ determined by the included chart. Approach taper to be a minimum of 50 feet as determined by the City Engineer. Medians shall be aesthetically pleasing with bricks, stamped concrete, or landscape. Medians that are 5 feet in width or less measured from the back of curb shall be hard-scaped. Medians are considered a “special design” and plans addressing plant materials, irrigation, drainage and impact on adjacent pavement must be submitted. Maintenance of the medians will be on a case by case basis and approved by the City Engineer.

TABLE I~~I~~I

MINIMUM LENGTH OF LEFT-TURN LANES

STREET CLASSIFICATION	**MINIMUM ~~STORAGE~~ LENGTH**	**~~APPROACH TAPER LENGTH~~**
LOCAL (all)	~~50~~ 200 ft.	~~100 ft.~~
COLLECTOR (rural or minor)	~~80~~ 200 ft.	~~100 ft.~~
MAJOR COLLECTOR	~~100~~ 225 ft.	~~180 ft.~~
MINOR ARTERIAL ~~(all)~~	~~200~~ 390 ft.	~~200 ft.~~
MAJOR ARTERIAL	465 ft.	

Optimally, median openings will be spaced, at a minimum, every 1000 feet. The City can approve additional median openings, but in no case should an opening be closer than 500 feet to another opening or to a street intersection. All median openings shall require a left turn lane.

Additional design information and details shall be as published by AASHTO.

FLARED SECTIONS (“Culdesacs”, “Elbows”, “~~Knuckels~~Knuckles”, “Eyebrows”):

Note that the Cities do not require the use of flared sections in residential subdivisions even if the streets do not have a ninety degree bend. The flared sections are actually discouraged as they often cause maintenance issues.

Islands will be considered as “special designs” and will be reviewed on a case by case basis. A homeowner’s association is required to provide maintenance of landscaping and improvements contained in islands.

If an island is proposed in a culdesac or flared section, the developer is responsible to design and install no parking signage for the roadway around the island. No parking is necessary to ensure adequate access for sanitation trucks and emergency vehicles.

All flared sections shall be concrete pavement only.

All dead end streets shall end in a culdesac.

SIDEWALKS:

Sidewalks shall be a minimum of 5 feet in width (located ~~3~~ 4 feet from the back of curb) on local streets. Sidewalks located along streets classified as minor collector and larger shall be a minimum of 6 feet in width (located ~~3~~ 4 feet from the back of curb) or 8 feet in width when located adjacent to the back of curb. In existing street areas where this is not possible the City will work with the developer on a width compatible with existing conditions. When approved by the City, sidewalk alignments may be varied to accommodate landscaping and avoid trees or other obstructions in the standard sidewalk location. In all circumstances, a minimum clear pedestrian width of 4 feet shall be provided.

Designs for the construction of sidewalks and ambulatory ramps shall meet current TAS and PROWAG standards ~~-~~and be ADA compliant~~standards~~.

Concrete driveways, regardless of length or slope, will contain a minimum ~~5~~ 3 foot wide sidewalk section with a cross slope as shown on the standard detail which aligns with sidewalk approaches.

In instances where drainage passes underneath a sidewalk and cannot be accommodated otherwise, steel plates shall be used, ¾” thick, diamond shaped surface, and bolted down. Design shall be approved by the City Engineer.

PAVEMENT STRUCTURE:

Pavement structure for urban streets is generally determined by the anticipated

loads to be carried, the quality and strength of the paving materials used and the load bearing capacity of the underlying subgrade. This manual provides minimum criteria for both rigid and flexible pavements using generalized soil conditions applicable to coarse grained and clay soils for each street classification. These minimum criteria are shown in Table VIII~~I~~.

The design engineer shall visit the site and make soil tests to determine the appropriate subgrade preparation and pavement design.

If an alternate pavement design is proposed, the engineer should discuss with the City such alternate ideas and methodology. The engineer shall base the pavement thickness designs on actual soil analyses and use the current AASHTO pavement thickness design methods. Specific pavement thickness designs submitted for approval must be accompanied by soils testing reports to fully support the assumptions of the procedure being used. Parameters based on general soil classifications will not be permitted. The City reserves the right to deny alternate designs.

When underground utility conduits or storm sewers are constructed or reconstructed in open trenches beneath new pavement, the trenches must be backfilled over the required bedding and compacted up to the bottom of the subgrade as shown in the City's Standard Construction Details.

CURBING:

Rural streets are not required to have curbs. All other streets shall have 6-inch raised curb. Residential streets may have a standard lay-down curb. All lay-down curb designs must be accompanied with drainage design calculations. Sidewalks shall not be installed adjacent to lay-down curb.

Curbing for rigid pavements shall conform to the cross sections as shown in the City's Standard Construction Details and shall be poured monolithically with the paving or be doweled in.

STREET CROWNS:

Street crowns shall be at the centerline of pavement and will be set by a straight 3% cross-slope upward from the edge of the gutter. Offset crowns may be used in unusual circumstances. No streets, with the exception of alleys, will be allowed to have center drains.

ETJ STREETS:

Concrete streets are not allowed in developments in the ETJ.

Utilities parallel to the roadway in ETJ developments shall not be located within rights of way.

ENTRANCE ISLANDS:

Entrance islands will be considered as "special designs" and will be reviewed on a case by case basis. A homeowners association is required to provide maintenance of landscaping and improvements contained in entrance islands.

SIGNAGE:

Regulatory Signage:

All regulatory signage shall be in compliance with the TMUTCD. In College Station, the Developer shall install at least three 'End of Road' signs (OM4-1) per TMUTCD standards using TxDOT's sign foundation "Wedge Anchor System". In College Station, the Developer shall install any required 'No Parking' signs in accordance with the Unified Development Ordinance.

Street Name Signs

In the City of College Station only, street name signs will be installed by the Developer. Developer must submit a dimensioned location plan and the street name signs for both public and private streets shall be designed and installed according to the City's standards. This sign standard can be acquired by contacting the City's Traffic Division. The Developer shall contact the City of College Station's Planning and Development Services to acquire the required block number for the signs. The City of Bryan will continue to install signs with city forces. A fee for sign installation, in the City of Bryan only, shall be paid at the time that the final plat is ready for filing.

Decorative Signage

Special sign poles are allowed but the installation must meet State safety requirements.

Other Signs

All other signs will be regulated by the sign ordinance.

Foundations

City of Bryan shall require the "Wedge Anchor System" on all signs.
City of College Station shall require, as shown on TxDOT standard details, the "Triangular Slipbase System" on collectors and above and the "Wedge Anchor System" on local streets.

TABLE ~~II~~ IV
PAVEMENT MARKINGS AND SIGNAGE

	PAVEMENT	STREET NAME	

	MARKINGS (INCLUDING BIKE LANES)	SIGNS	ALL OTHER SIGNAGE
PLANS	Developer provides plans for all streets and facilities to TMUTCD standards	(In College Station) Developer produces dimensional location plan	Developer provides plans for all streets and facilities to TMUTCD standards
INSTALLED	Developer installs all pavement markings and markers.	(In College Station) Developer installs street name signs. Letter of Completion and opening held until all signs are installed. (In Bryan) City to install all street name signs. Letter of Occupancy to be held until street name sign fee has been received	(In College Station) All signs must meet the TMUTCD and are to be installed by the developer, except for regulatory signs. Additionally, the developer shall be responsible for installing 'End of Road' markers according to TMUTCD standards. The Developer shall be responsible for installing 'No Parking' signs in accordance with the Unified Development Ordinance. (In Bryan) All signs, except street name signs, are installed by the Developer unless otherwise specified.

PAVEMENT MARKINGS:

Construction Plans shall note that all pavement markings shall meet the latest version of the TxDOT Standard Specifications Item 666 for Type I markings.

Crosswalks

Crosswalk markings are important traffic control devices at controlled intersections. These devices identify the appropriate location for pedestrians to cross the intersection as well as informing drivers where pedestrians maybe present. Not all locations need the crosswalks marked; however, typically collector and arterial streets do. As stated in

the TMUTCD, an engineering study should be performed before crosswalks are installed at locations other than controlled intersections.

The City of Bryan's preference for marking crosswalks is the longitudinal style (or "Ladder" style). The City of College Station's preference is the typical "Transverse" style; however, in the Northgate area, adjacent to school or school zones, and other high pedestrian crossings, the longitudinal style (or "Ladder" style) is preferred. Deviation from these preferences will be allowed only with the approval of the City Engineer.

The longitudinal style markings shall be 24" wide and 8 feet in length, spaced 48-inches apart.

The transverse markings shall consist of two 12-inch wide lines separated by 6 feet of unmarked pavement. All crosswalk pavement markings shall always meet TxDOT's specification for Type I markings unless otherwise approved by the City Engineer.

Additional information about crosswalk markings can be found in the TMUTCD.

The design of crosswalks with brick pavers, stamped asphalt, stamped concrete, etc., shall also accommodate in that design the placement of retroreflective, thermoplastic transverse or longitudinal style striping for crosswalks.

Stop and Yield Lines

Unless otherwise specified, all stop and yield lines shall meet TxDOT's specification for Type I markings

The design of crosswalks with brick pavers, stamped concrete, etc. shall also accommodated in that design the placement of retroreflective stop lines and/or yield lines.

STREETSCAPE:

Handrails

The design shown in the Standard Sidewalk Details will be used wherever a ~~vertical drop~~ grade change of 8 inches or greater within 3 feet of the walkway exists. Any significant drop may require handrails as determined by the City Engineer.

Street Furniture

Street furniture will be in accordance with the standards adopted in the overlay district, where one exists.

Brick Pavers

Brick pavers may be used on sidewalks and on streets at crosswalks or in intersections. Brick pavers in streets and sidewalks are to be placed on top of full depth concrete pavement. The color and texture of brick pavers will be in accordance with the standards adopted in the overlay district, where one exists. Retroreflective thermoplastic transverse striping is required on either side of brick paver crosswalks.

Brick pavers shall be used on medians less than 4 feet in width or within 50 feet of median noses. Brick pavers in medians will be installed on top of a sand bed or base material instead of full depth pavement.

Patterned Colored Concrete

Patterned colored concrete may be used on sidewalks, crosswalks, in intersections, or in medians. Color should be integral to the concrete or by stain.

GATED NEIGHBORHOODS:

No gates are allowed on public streets. A homeowners association is required for maintenance of gates. Access shall be provided for emergency services, utility and solid waste services and for pedestrians.

STREETLIGHTS:

Street lighting will be included in all new developments. The pole lamp and fixture specifications as well as the cost for street light installation will be per local codes. Street lights should be placed at all intersections, at the end of all cul-de-sacs and at a spacing of 300 feet. Spacing within rural areas may be larger with approval of the City Engineer.

BICYCLE FACILITIES:

All bicycle facilities, including but not limited to, bike routes, bike lanes, and bike paths shall be designed in accordance with the most current AASHTO guidelines.

TABLE ~~III~~ V - MINIMUM GEOMETRIC DESIGN CRITERIA FOR NEW CONSTRUCTION

	Alley	Residential	NTD Residential Streets[1]	Rural[4] Residential	ETJ/City Rural[4] Collector	Minor Collector/ Commercial Street	Major Collector	Minor Arterial Undivided	Minor Arterial ~~Divided~~	Major Arterial
ROW[2]	24’	50’	50’	70’	90’/100’	60’[7]	80’	~~100’~~105’	~~100’~~105’	~~120’~~130’
Pavement Width[3]	12’	27’	24’	24’	~~30’~~36’	38’	54’	~~70’~~72’	~~72’ or 78’~~ 83’	~~96’~~95’
Traffic Lanes	N/A	2	2	2	2	2 ~~or 3~~	3 ~~or 4~~	5	4	6
Lane Width[5]	N/A	N/A	N/A	12’	~~15’~~16’	12’	12’ ~~or 12’/15’[5]~~	11’ ~~12.5’/15’[5]~~	~~12.5’/15 or~~ 12.5’/12’[5]	12.5’/12’/ ~~15’~~12.5’[5]
Curb	None	Laydown or standard	Laydown or standard	None[6]	None	Standard	Standard	Standard	Standard	Standard
Shoulder Width	N/A	N/A	N/A	2 @ ~~3’~~2’ Ea[6]	2 @ ~~3’~~2’ Ea[6]	N/A	N/A	N/A	N/A	N/A
Left Turn Lane Width	None	None	None	None	None	Permitted (~~14~~ 13’)	Permitted (~~16’~~14’)	Permitted (~~15’~~12’)	None	None
Parking	None	Permitted	One Side Only	None	None	~~Permitted w/out bike lanes~~ None	None	None	None	None
Raised Medians	None	None	None	None	None	None	None	None	17’	~~17’~~ 21’
Sidewalks Req./Width	None	Per local Subdivision Ordinance/ 5’	Per local Subdivision Ordinance/ 5’	None	None	Both/ 6’ [8]	Both/ 6’ [8]	Both/ 6’ [8]	Both/ 6’ [8]	Both/ 6’ [8]
Bike Lanes	N/A	N/A	N/A	N/A	N/A	~~Permitted per bicycle plan~~ Required	~~Permitted per bicycle plan~~ Required	~~N/A~~Permitted per bicycle plan	~~Permitted per bicycle plan~~ Required	N/A

NOTES:

- Cul-de-sacs on residential and rural streets, including streets in the ETJ, less than 100’ in length (not including cul-de-sac diameter) shall have a 50’ ROW radius with a 40’ pavement radius. All other cul-de-sac streets shall have a min. 60’ ROW radius with a min. 50’ pavement radius. Temp.” T” turnarounds, in accordance with the local fire code, will only be allowed under circumstances when no other option is viable and with prior approval.
- At all intersecting street rights-of-ways, provide a minimum 25’ ROW chamfer. See Figure 12.
- Additional easements may be required parallel to the street right-of-way for utilities if necessary.

[1] No more than 24 lots between cross streets. Allowed in single family developments only.

[2] Right of Way widths listed herein are a minimum and additional right of way may be required. ~~for the City of Bryan. Right-of-Way widths for the City of College Station are provided in Table V~~. At intersections of collector to collector streets or greater, additional row will be provided for dual left or right turn lanes as required by traffic impact study or requested by the City and~~.~~ according to the Minimum Length and Additional Right-of-Way for Turn Lanes at Intersections.

[3] Pavement widths are measured from back of curb to back of curb or from the edge of pavement to edge of pavement where there is no curb.

[4] Rural sections shall only be used where allowed by local zoning. Rural collector streets will not be required to have 16’ easements parallel to right-of-way within ETJ limits and will not be allowed within city limits.

[5] Wider lanes required on outside lanes only.

[6] Rural Residential Shoulders shall be asphalt primed or shall have ribbon curb installed. Ribbon curb applies only to those rural sections located within the city limits.
[7] A 5 foot easement will be required on either side of right-of-way.
[8] Sidewalk may be 8 feet in width when located adjacent to the back of curb.

~~TABLE IV~~

~~CITY OF COLLEGE STATION REQUIRED RIGHT-OF-WAY~~

~~Roadway Classification**~~	~~Context Class**~~	~~Right-of-Way Width (ft)*~~
~~Alley~~	~~n/a~~	~~24~~
~~Local~~	~~Suburban~~ ~~Estate/Rural~~	~~50~~ ~~70~~
~~Minor Collector (Commercial Street)~~	~~Mixed Use Urban~~ ~~Urban~~ ~~General Suburban~~ ~~Restricted Suburban~~ ~~Estate/Rural~~	~~85~~ ~~85~~ ~~77~~ ~~77~~ ~~100~~
~~Major Collector 2-Lane~~	~~Mixed Use Urban~~ ~~Urban~~ ~~General Suburban~~ ~~Restricted Suburban~~ ~~Estate/Rural~~	~~100~~ ~~100~~ ~~77~~ ~~77~~ ~~100~~
~~Major Collector 4-Lane~~	~~Mixed Use Urban~~ ~~Urban~~ ~~General Suburban~~ ~~Restricted Suburban~~ ~~Estate/Rural~~	~~125~~ ~~125~~ ~~115~~ ~~115~~ ~~115~~
~~Minor Arterial 4-Lane~~	~~Mixed Use Urban~~ ~~Urban~~ ~~General Suburban~~ ~~Restricted Suburban~~ ~~Estate/Rural~~	~~125~~ ~~125~~ ~~115~~ ~~115~~ ~~115~~
~~Major Arterial 4-Lane~~	~~Mixed Use Urban~~ ~~Urban~~ ~~General Suburban~~ ~~Restricted Suburban~~ ~~Estate/Rural~~	~~128~~ ~~128~~ ~~118~~ ~~118~~ ~~112~~
~~Major Arterial 6-Lane~~	~~Mixed Use Urban~~ ~~Urban~~ ~~General Suburban~~ ~~Restricted Suburban~~ ~~Estate/Rural~~	~~150~~ ~~150~~ ~~140~~ ~~140~~ ~~165~~

~~* (Note: Table IV provides the ROW requirements for the City of Bryan.) At intersections of collector to collector streets or greater, additional right-of-way will be provided for dual left or right turn lanes as required by traffic impact study or requested by the City~~

~~** Roadway Classification and Context Class is determined by the City of College Station's most current Thorough Fare Plan.~~

TABLE VI

STREET CLASSIFICATION DEFINITIONS

ALLEY: A minor public right-of-way which provides a secondary means of vehicular access to abutting property and which is used primarily for vehicular traffic to the rear or side of properties which otherwise abut on a public street. Parking is not allowed on alleys.

COMMERCIAL STREET: A street which primarily serves commercial or multi-family development. Commercial streets shall be built to at least Minor Collector standards.

MAJOR ARTERIAL STREET: A street which carries high volumes of vehicular traffic (in the general range of 20,000 VP to 60,000 VP) and which is intended to move traffic in, out or around the City.

MINOR ARTERIAL STREET: A street which carries high volumes of vehicular traffic (in the general range of 5,000 VP to 30,000 VP) and which is intended to move traffic around the City.

MAJOR COLLECTOR STREET: A street which primarily serves vehicular traffic (in the general range of 5,000 to 10,000 VP) from residential streets and minor collectors to arterials. A collector may also provide very limited access to abutting properties if approved by the City.

MINOR COLLECTOR STREET: A street which primarily serves vehicular traffic (in the general range of 1,000 to 5,000 VP) from residential streets to collectors or arterials. A minor collector may also provide limited access to abutting properties if approved by the City. Additionally, the streets identified as collectors on the Thoroughfare Plan may be designed as minor collectors only if approved by the City.

NEO-TRADITIONAL DESIGN (NTD) RESIDENTIAL STREET: A street which primarily serves vehicular traffic to abutting single family residential properties where narrow, more curvilinear streets are desired. Parking is only allowed on one side of the street and block length is limited.

RESIDENTIAL STREET: A street which primarily serves vehicular traffic to abutting residential properties. A residential may also provide limited access to commercial properties if approved by the City.

RURAL RESIDENTIAL STREET: A street in the ETJ of the City which primarily serves vehicular traffic to abutting residential properties. A rural residential may also provide limited access to commercial properties if approved at the time of platting by the City and County. Construction and maintenance of the rural residential streets are generally under the jurisdiction of the County. Rural street sections are allowed inside the city limits in areas with appropriate zoning and lot size. Refer to the local zoning ordinance for guidance.

RURAL COLLECTOR STREET: A street in the ETJ of the City which primarily serves vehicular traffic from residential streets to arterials. A rural collector may provide limited access to abutting residential properties if approved at the time of platting by the City and County. Construction and maintenance of the rural collectors are generally under the jurisdiction of the County.

TABLE VII

MINIMUM GEOMETRIC CRITERIA FOR STOPPING SIGHT DISTANCE

STREET CLASSIFICATION	DESIGN VEHICLE	DESIGN SPEED (mph)	STOPPING SIGHT DISTANCE (ft)	MIN. "K" [1]	
				CREST	SAG
MINOR COLLECTOR	SU	35	250	29	49
RURAL COLLECTOR & MAJOR COLLECTOR	SU	40	305	44	64
MINOR ARTERIAL	WB-50	45	360	61	79
MAJOR ARTERIAL	WB-50	By Design	By Design	By Design	By Design

[1] If intersecting grades result in a "K" value less than that shown, the minimum vertical curve length shall be equal to 3xDesign Speed.

NOTES:

- Sight distance at street intersections shall be provided in accordance with the latest edition of AASHTO's "*A Policy on Geometric Design of Highways and Streets*" measured 10' from the edge of the intersecting street.

TABLE VIII
MINIMUM GEOMETRIC CRITERIA FOR HORIZONTAL CURVATURE

Street Classification	Design Vehicle	Design Speed (mph)	Des. Max. Rate of Super-elevation (%)	Min. Center-line Radius (ft)	Max Tangent Between Reverse Curves	Min. Tangent Between Reverse Curves (ft)	Max. Relative Edge Slopes for Super Transition [1] (ft/ft)
Rural Collector	SU	40	N/A	575	N/A	By Design	N/A
Minor Collector	SU	35	N/A	430	N/A	By Design	N/A
Major Collector	SU	40	N/A	575	N/A	By Design	N/A
Minor Arterial	WB-50	45	6	675	N/A	By Design	1:200
Major Arterial	WB-50	By Design	6	By Design	N/A	By Design	1:225

[1] Super-elevation transition is to be accomplished 2/3 outside of the horizontal curve and 1/3 within the curve. The minimum tangent between successive horizontal curves should be designed such that proper super-elevation transitions can be effected.

Example for calculating super-elevation and minimum tangent between successive curves:

Given: 5-lane minor arterial with 12-foot lanes and a 14-foot TWLTL. Typical section is rooftop crown with 2% cross slopes. 675-foot curve left followed by a 675-foot curve right. Super-elevation rotation is about center of road.

6% maximum super-elevation required for the minimum curves given.
High side max. relative vertical transition = (0.06-(-0.02)) x (12'+12'+ (14'/2)) = 2.48 feet

Horizontal transition required to effect super-elevation = 2.48' x 200 (from last column in above table) = 496 feet

2/3 within tangent = 330 feet; 1/3 within curve = 166 feet
Low side max. relative vertical transition = (0.06 - 0.02) x (12'+12'+ (14'/2)) = 1.24 feet
Horizontal transition required to effect super-elevation = 1.24' x 200 (from last column in above table) = 248 feet

2/3 within tangent = 165 feet; 1/3 within curve = 83 feet
Therefore, the minimum tangent length required between these two curves is 495 feet, or 330 feet + 165 feet.

TABLE VIII

MINIMUM PAVEMENT THICKNESS CRITERIA

FLEXIBLE PAVEMENTS			
STREET CLASSIFICATION	SUBGRADE TREATMENT	BASE MATERIAL	SURFACE TREATMENT
RESIDENTIAL	6-in Lime-Stab.	6-in. Limestone, 6-in. Cement Stabilized Base or 4-in. HMAC	2-in. HMAC
MINOR COLLECTOR	6-in Lime-Stab.	8-in. Limestone, 8-in. Cement Stabilized Base or 5-in. HMAC	2-in. HMAC
COLLECTOR & ARTERIAL	*Design based upon Geotechnical Report, but not less than pavement structure shown for a minor collector.*		

RIGID PAVEMENTS		
STREET CLASSIFICATION	SUBGRADE TREATMENT	CONCRETE PAVEMENT
ALLEYS	6-in Cement-Stab. Sand or 6-in Lime-Stab.	6-in
RESIDENTIAL ~~(includes alleys)~~	6-in Lime-Stab.	6-in.
COLLECTOR AND PRIVATE LOCAL STREETS	6-in Lime-Stab.	8-in.
ARTERIAL	Design based upon Geotechnical Report, but not less than pavement structure shown for a collector.	

NOTE:

- Lime stabilization is the most commonly used for local clay soils. If other types of stabilization are desired, please submit information.
- College Station only allows rigid pavements.
- In Bryan, entire bulb of cul-de-sac shall be rigid pavement only

FIGURE ~~1~~ 2
RESIDENTIAL STREET SECTIONS

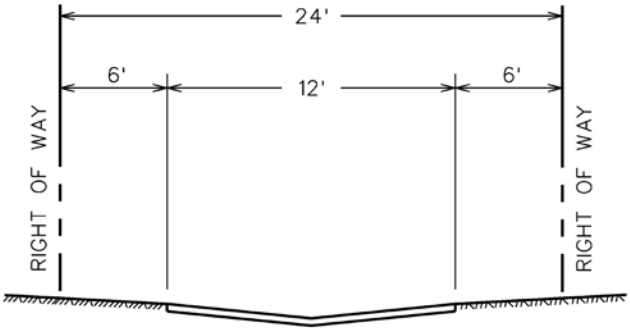

ALLEY

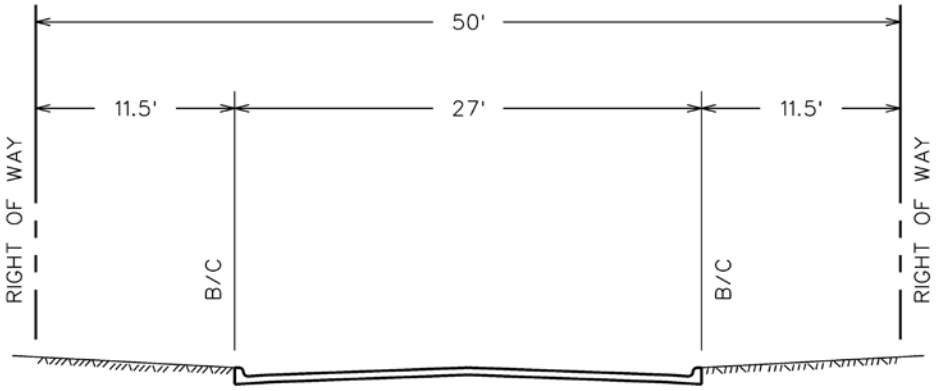

RESIDENTIAL

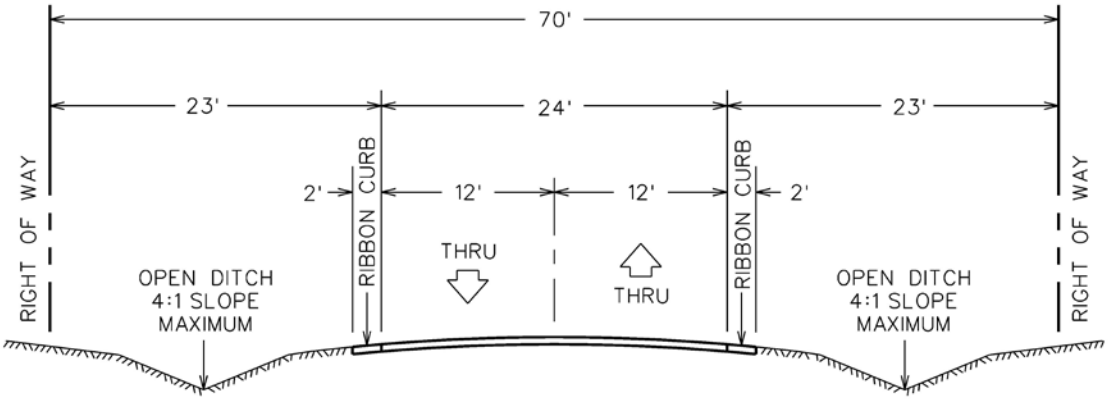

RURAL RESIDENTIAL

FIGURE 2
COLLECTOR STREET SECTIONS

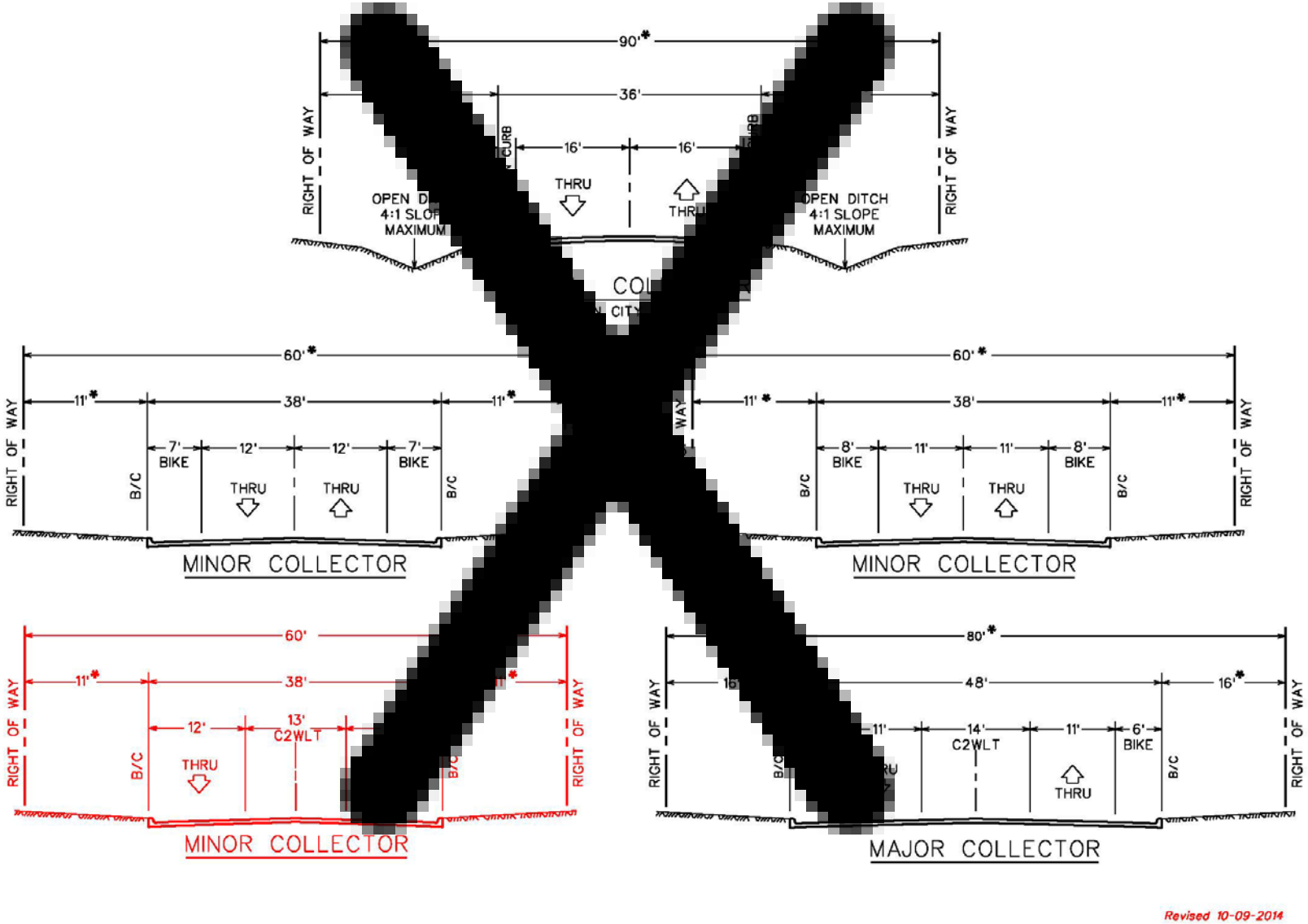

~~*Right-of-Way widths for the City of College Station are provided in Table V – City of College Station Required Right-Of-Way. Width of areas from the curb to the limit of the right-of-way in College Station, likewise, varies from above figure accordingly.~~

FIGURE ~~2~~ 3
COLLECTOR STREET SECTIONS

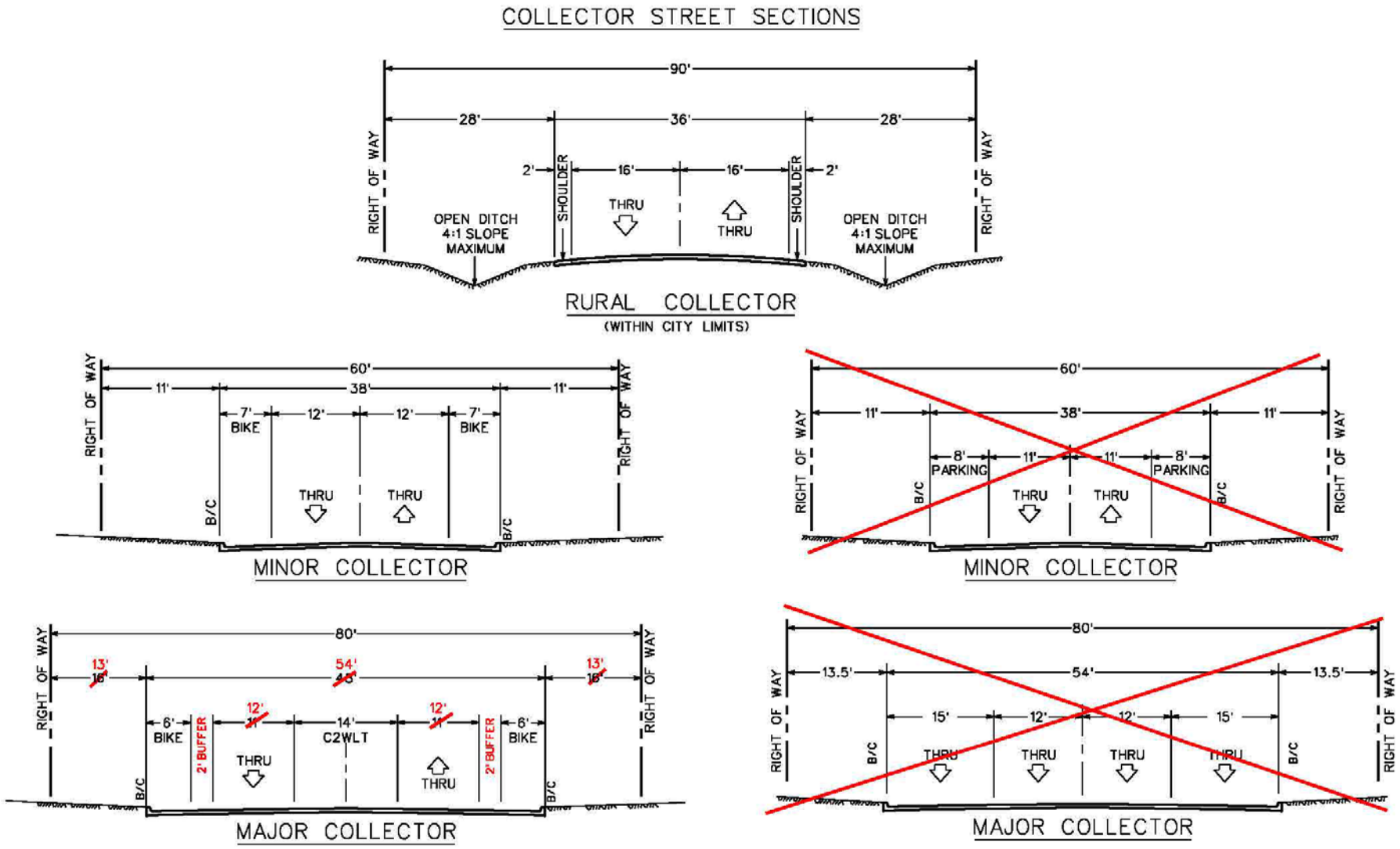

Note: Though not shown, sidewalks are required for each section except Rural Collector

FIGURE 3
ARTERIAL STREET SECTIONS

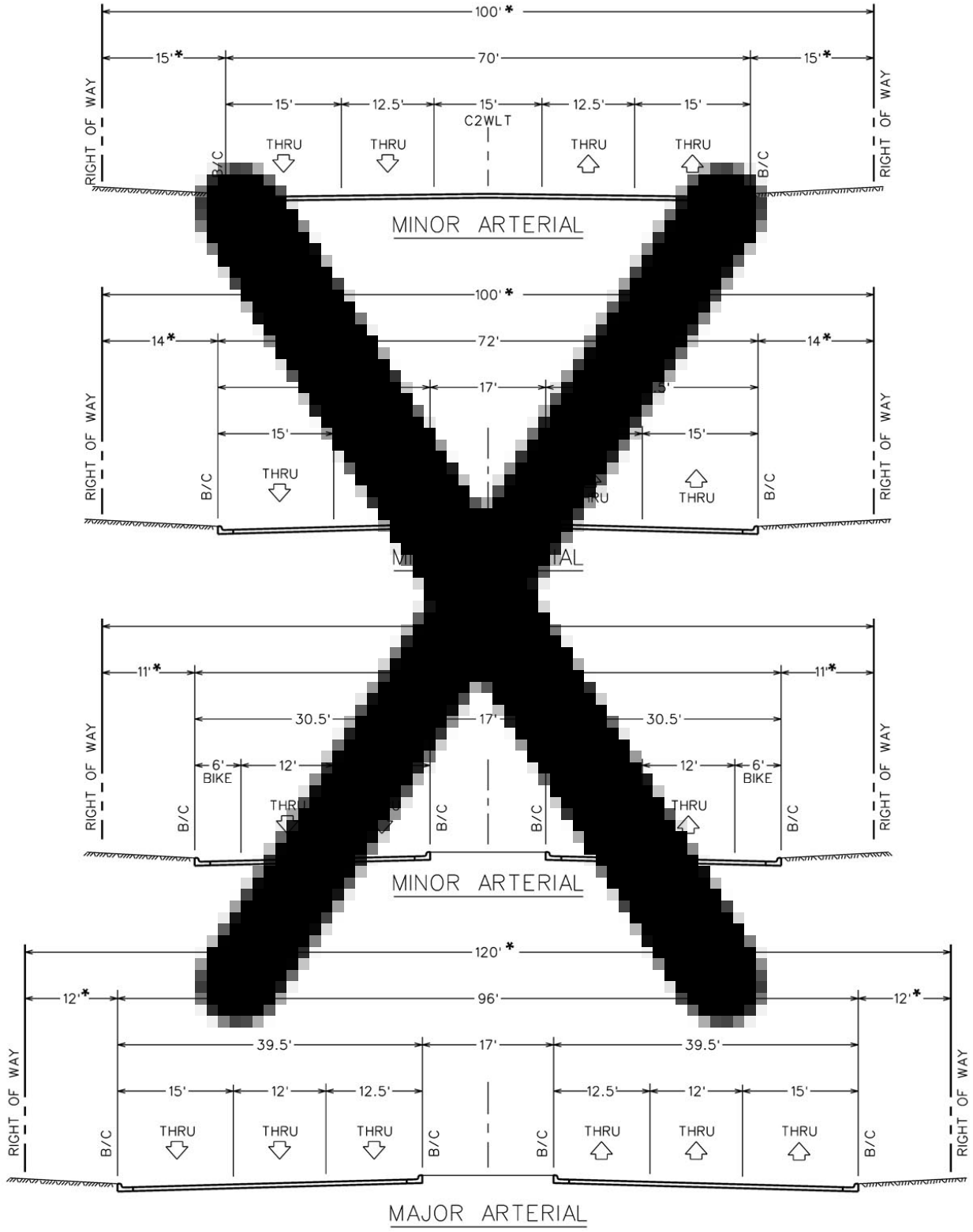

~~* Right-of-Way widths for the City of College Station are provided in Table V – City of College Station Required Right-Of-Way. Width of areas from the curb to the limit of the right-of-way in College Station, likewise, varies from above figure accordingly~~

FIGURE ~~3~~ 4
ARTERIAL STREET SECTIONS

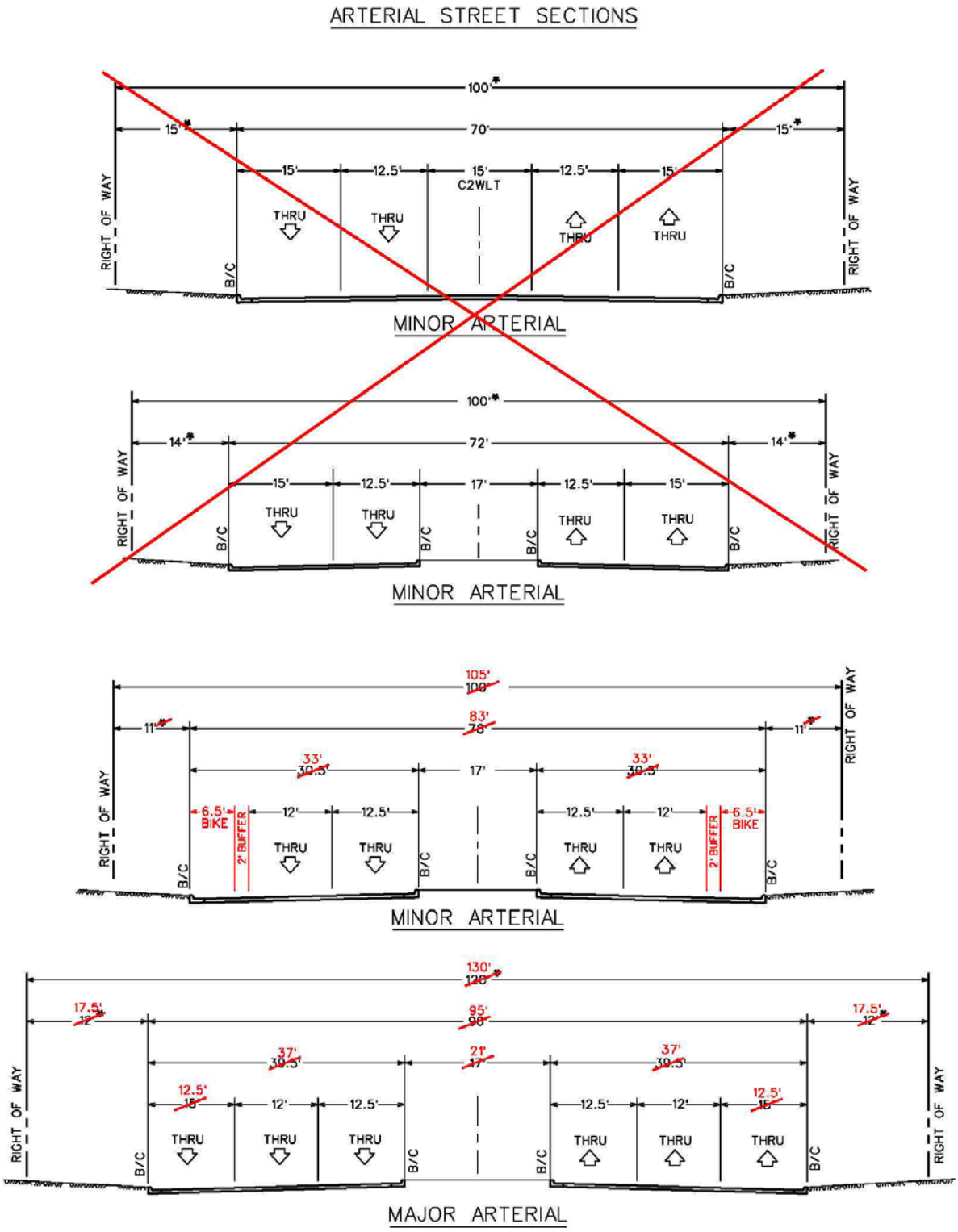

Note: Though not shown, sidewalks are required for each section

FIGURE 5

MEDIAN TURN LANE DIAGRAM

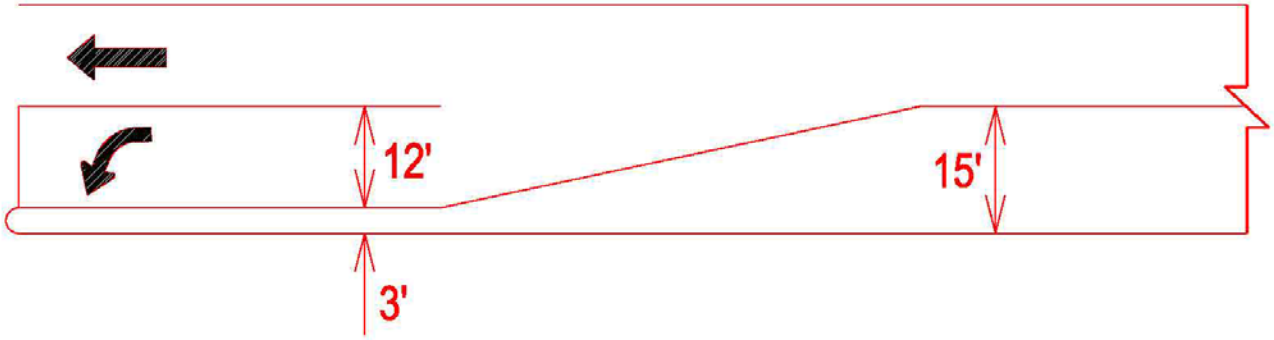

FIGURE ~~5~~ 6

BIKE LANE DIAGRAM

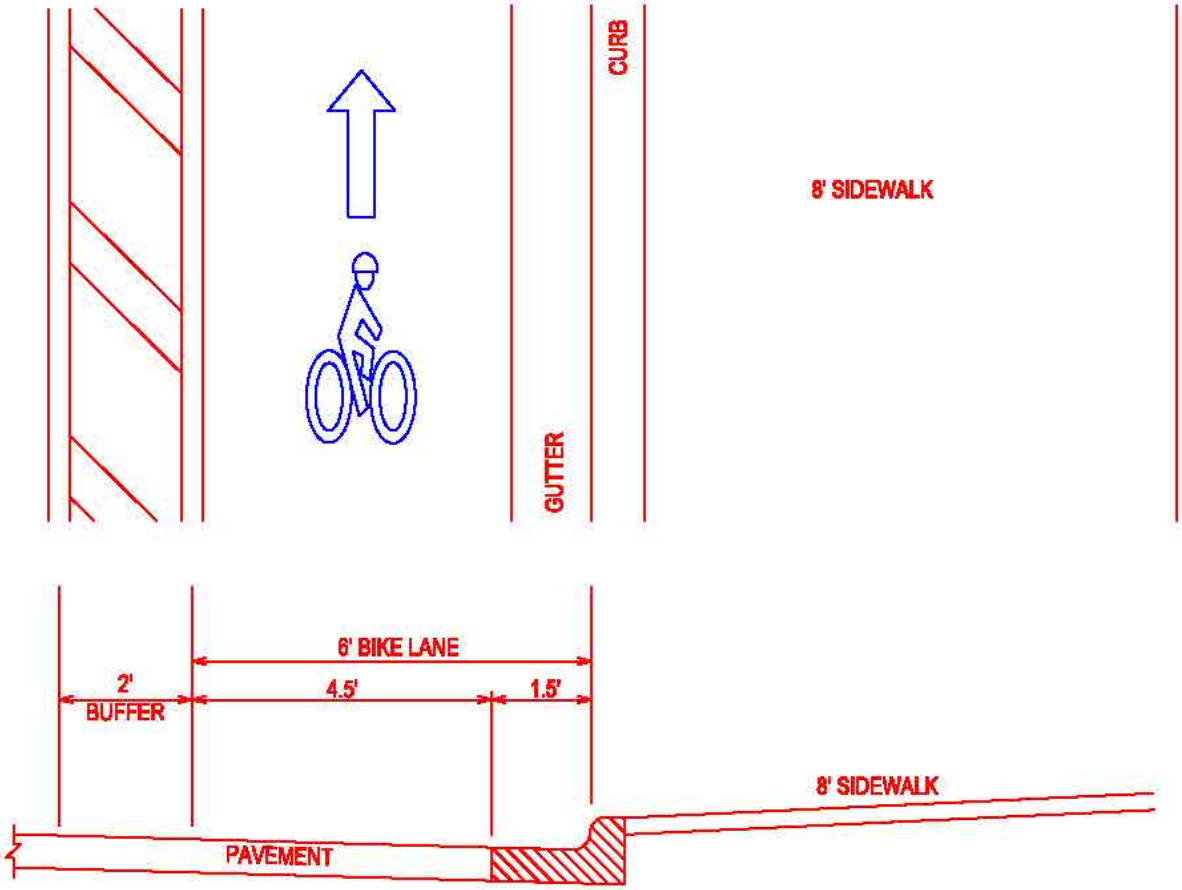

FIGURE 47
SINGLE UNIT TURNING DESIGN TEMPLATE

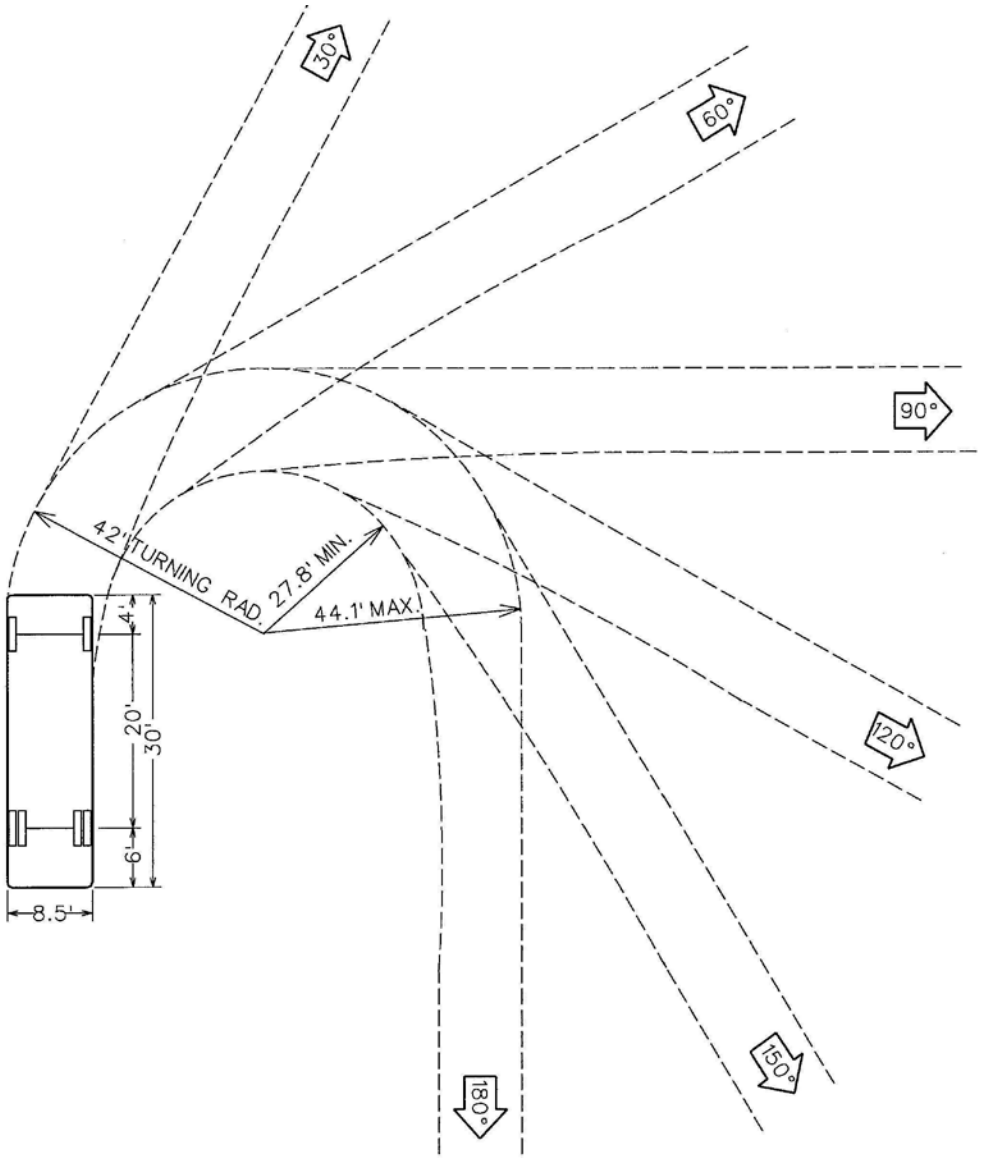

Radius = 42'
Scale: 1" = 20'

FIGURE ~~5~~ 8
WB-50 TURNING DESIGN TEMPLATE

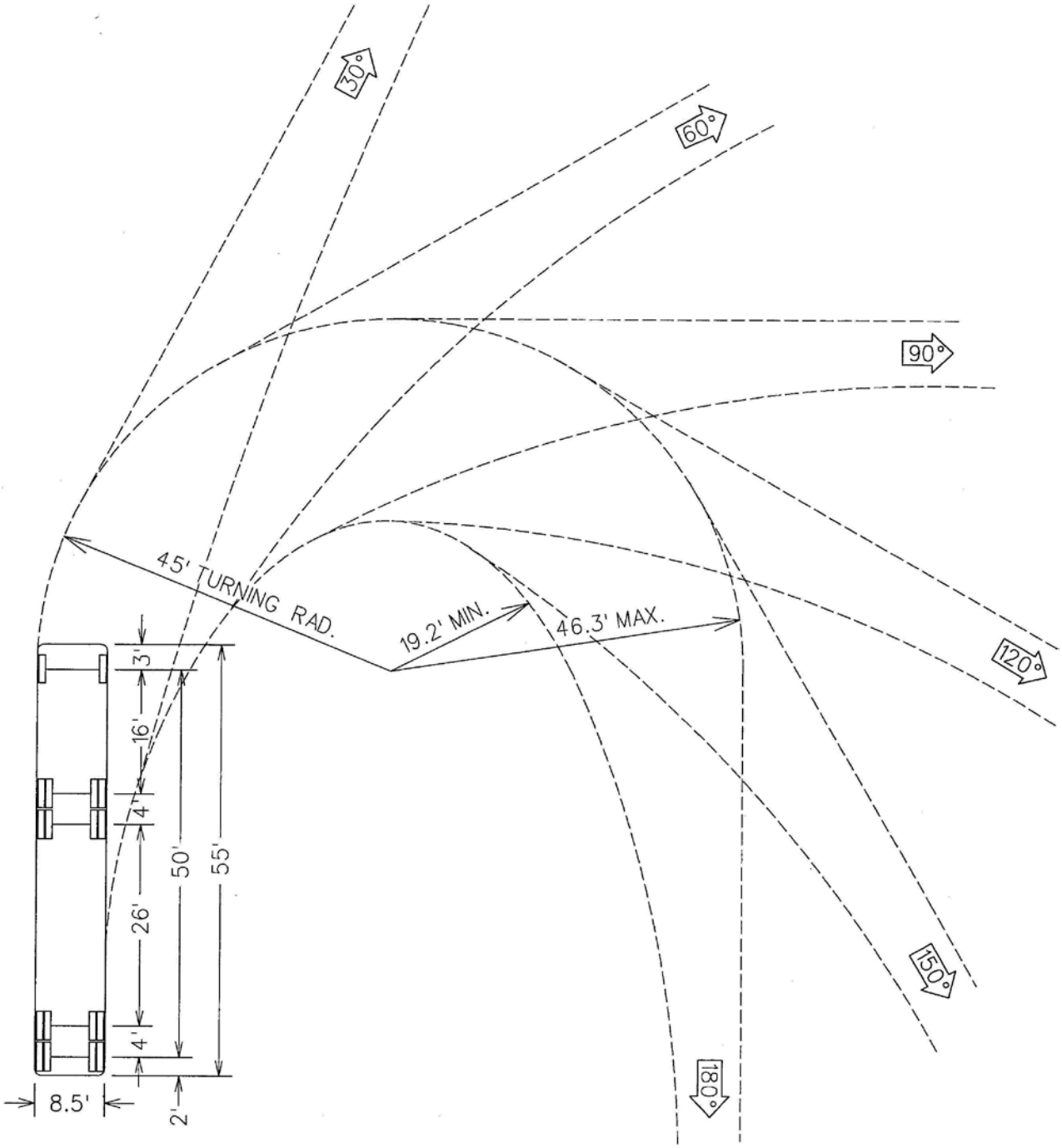

Radius = 45'
Scale: 1" = 20'

FIGURE ~~6~~ 9
PASSENGER CAR TURNING DESIGN TEMPLATE

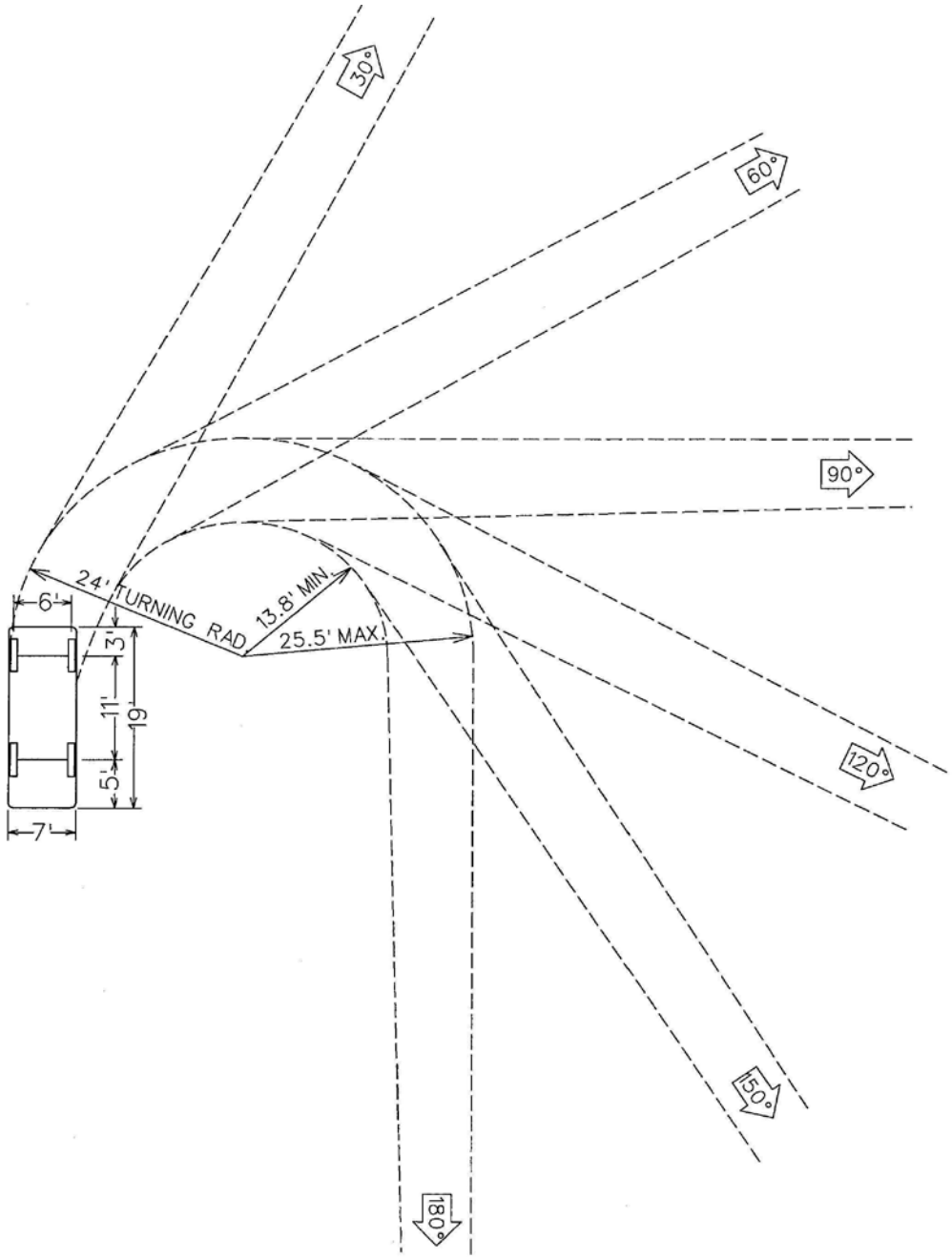

Radius = 24'
Scale: 1" = 20'

FIGURE ~~7~~ 10
FIRE LADDER TRUCK
TURNING DESIGN TEMPLATE

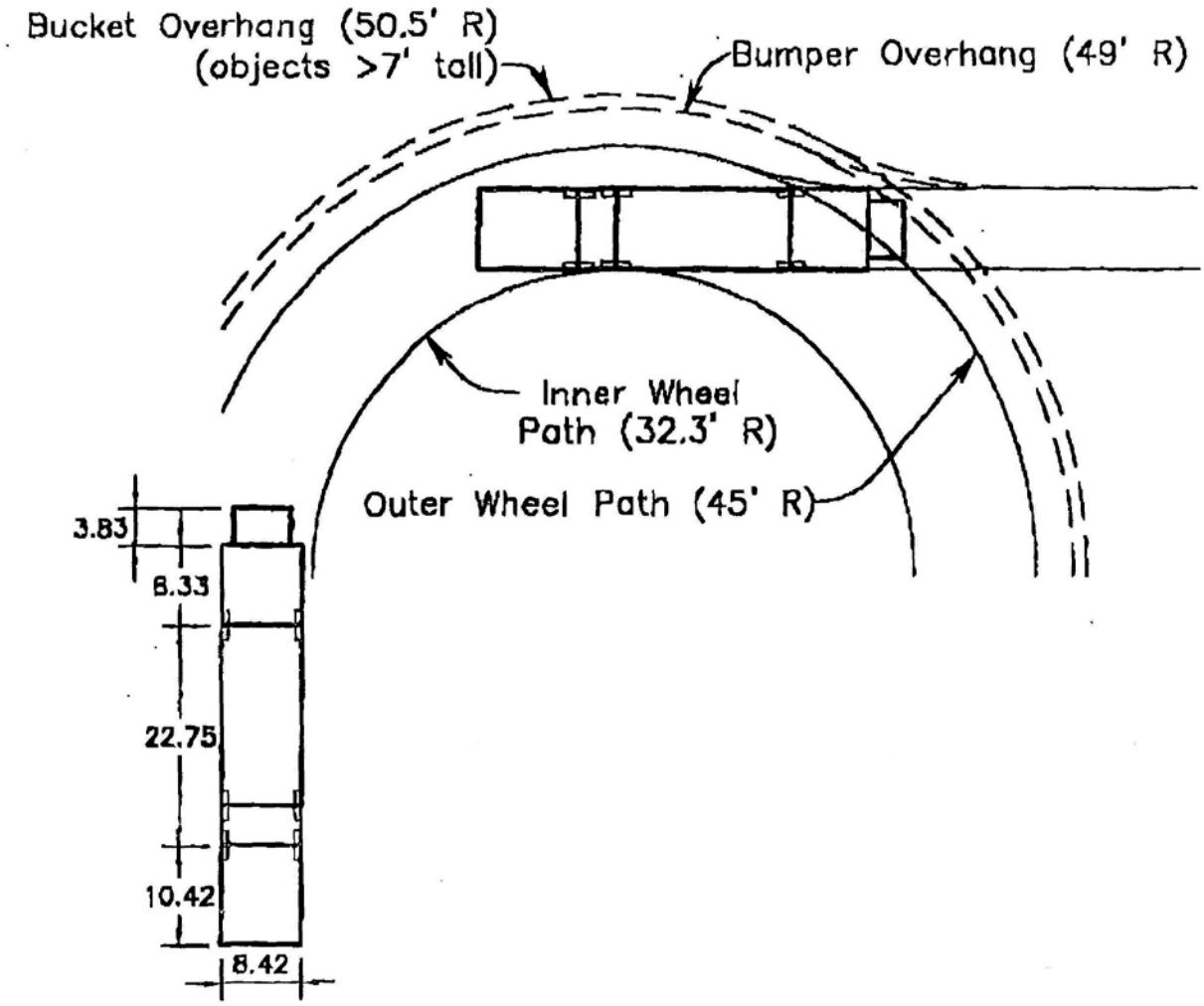

Radius = 45'
Scale = 20'

FIGURE 8

CLEARANCE DIMENSIONS FOR COMPOSITE VEHICLES

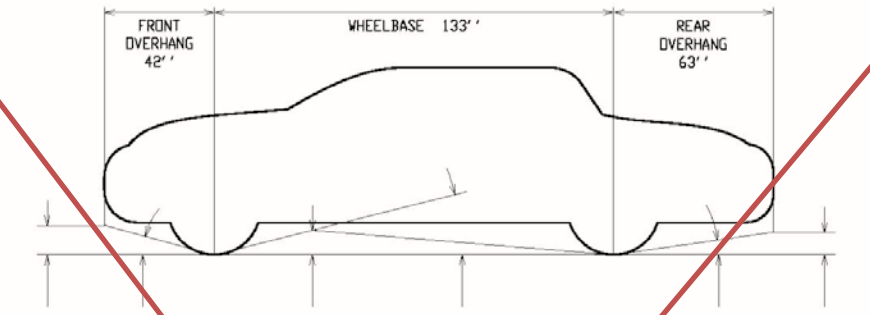

FRONT CLEARANCE	APPROACH ANGLE	CENTER CLEARANCE	RAMP ANGLE		DEPARTURE ANGLE	REAR CLEARANCE
11. 0''	15°	4. 0''	7°	NORMAL LOAD	9° 30'	10. 6''
7. 0''	9° 30'	2. 5''	4° 15'	FRONT DRIVE	10° 45'	12. 0''
11. 9''	16°	2. 5''	4° 15'	REAR JOUNCE	5° 45'	6. 2''
8. 0''	10° 45'	1. 0''	1° 45'	FULL JOUNCE	7°	7. 6''

COMPOSITE LONGEST VEHICLE: CLEARANCE DIMENSIONS UNDER VARIOUS CONDITIONS

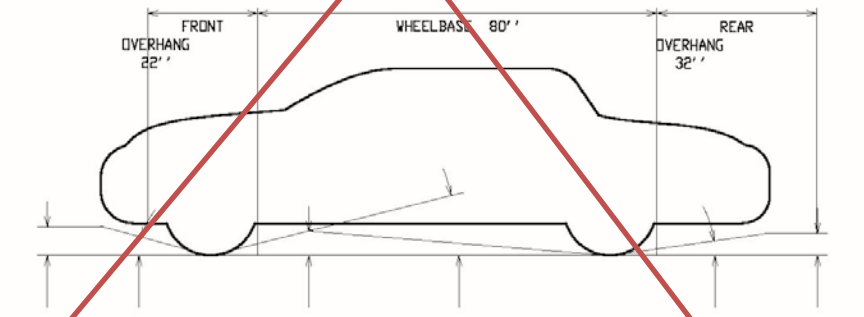

FRONT CLEARANCE	APPROACH ANGLE	CENTER CLEARANCE	RAMP ANGLE		DEPARTURE ANGLE	REAR CLEARANCE
5. 8''	15°	4. 9''	14°	NORMAL LOAD	8°	4. 5''
3. 3''	8° 30'	3. 9''	11°	FRONT DRIVE	9° 30'	5. 3''
6. 3''	16°	3. 9''	11°	REAR JOUNCE	3°	1. 7''
3. 8''	9° 45'	2. 9''	8° 30'	FULL JOUNCE	9°	2. 5''

COMPOSITE SHORTEST VEHICLE: CLEARANCE DIMENSIONS UNDER VARIOUS CONDITIONS

FIGURE 11
CLEARANCE DIMENSIONS FOR COMPOSITE VEHICLES

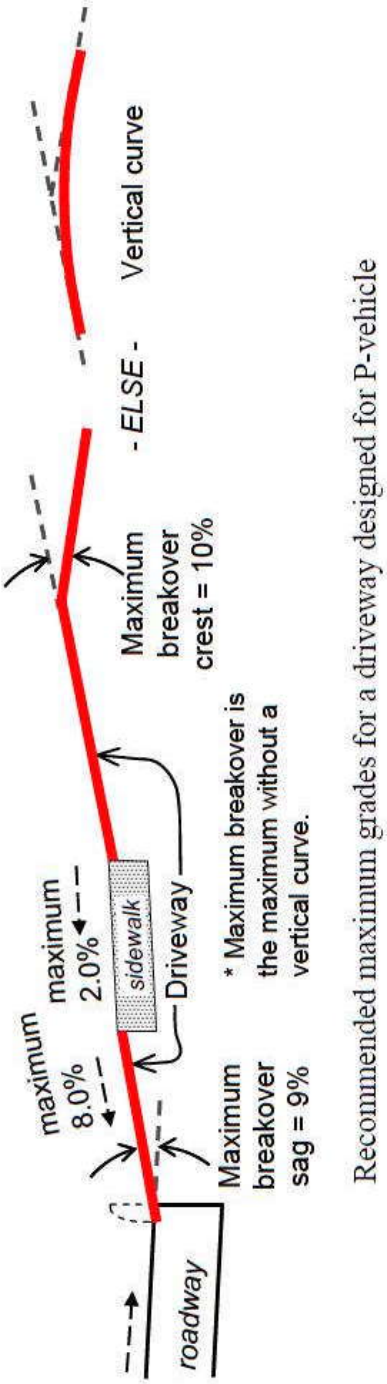

Recommended maximum grades for a driveway designed for P-vehicle

FIGURE ~~9~~12
CORNER CHAMFER

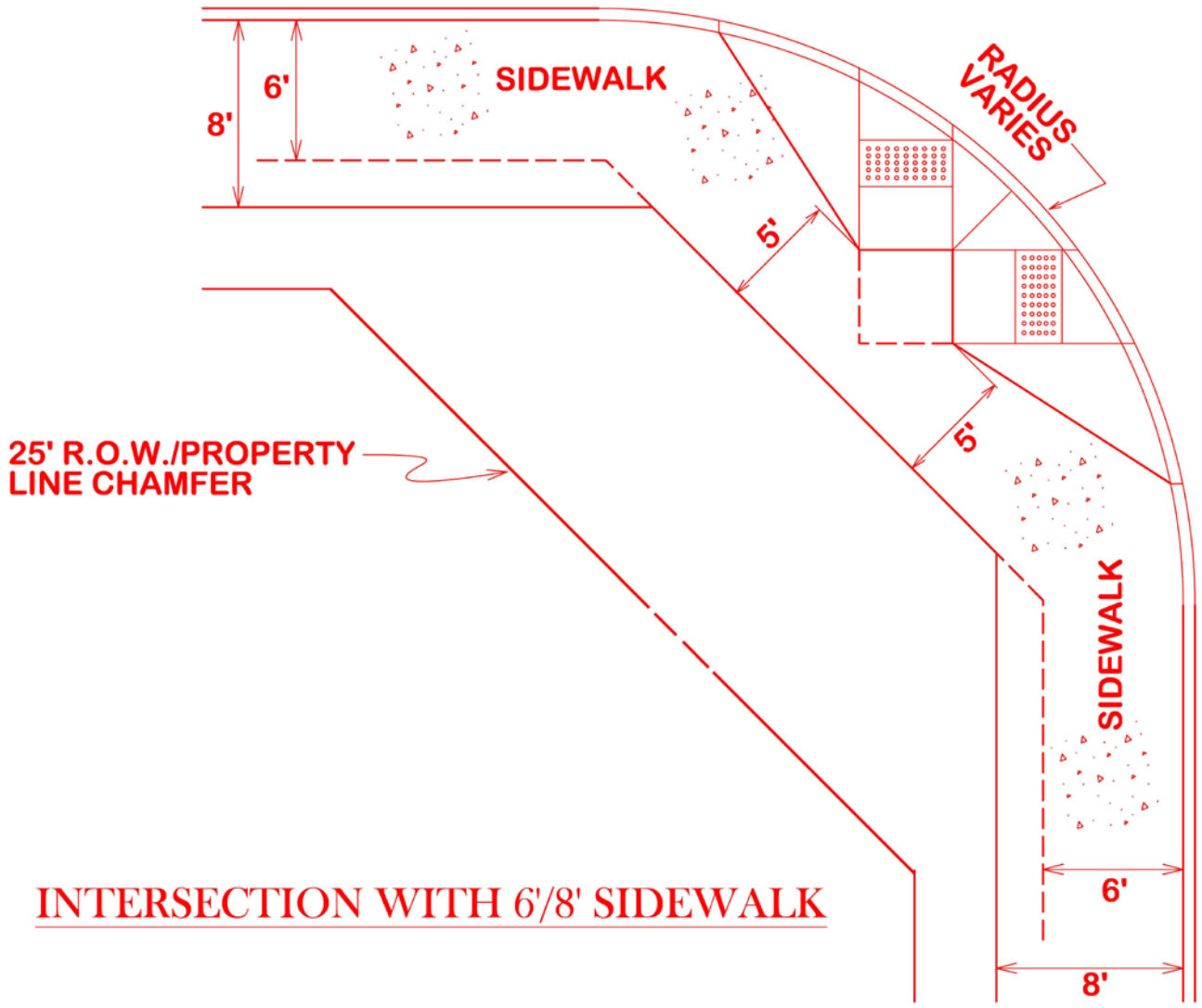

FIGURE 13
UTILITY CORRIDOR

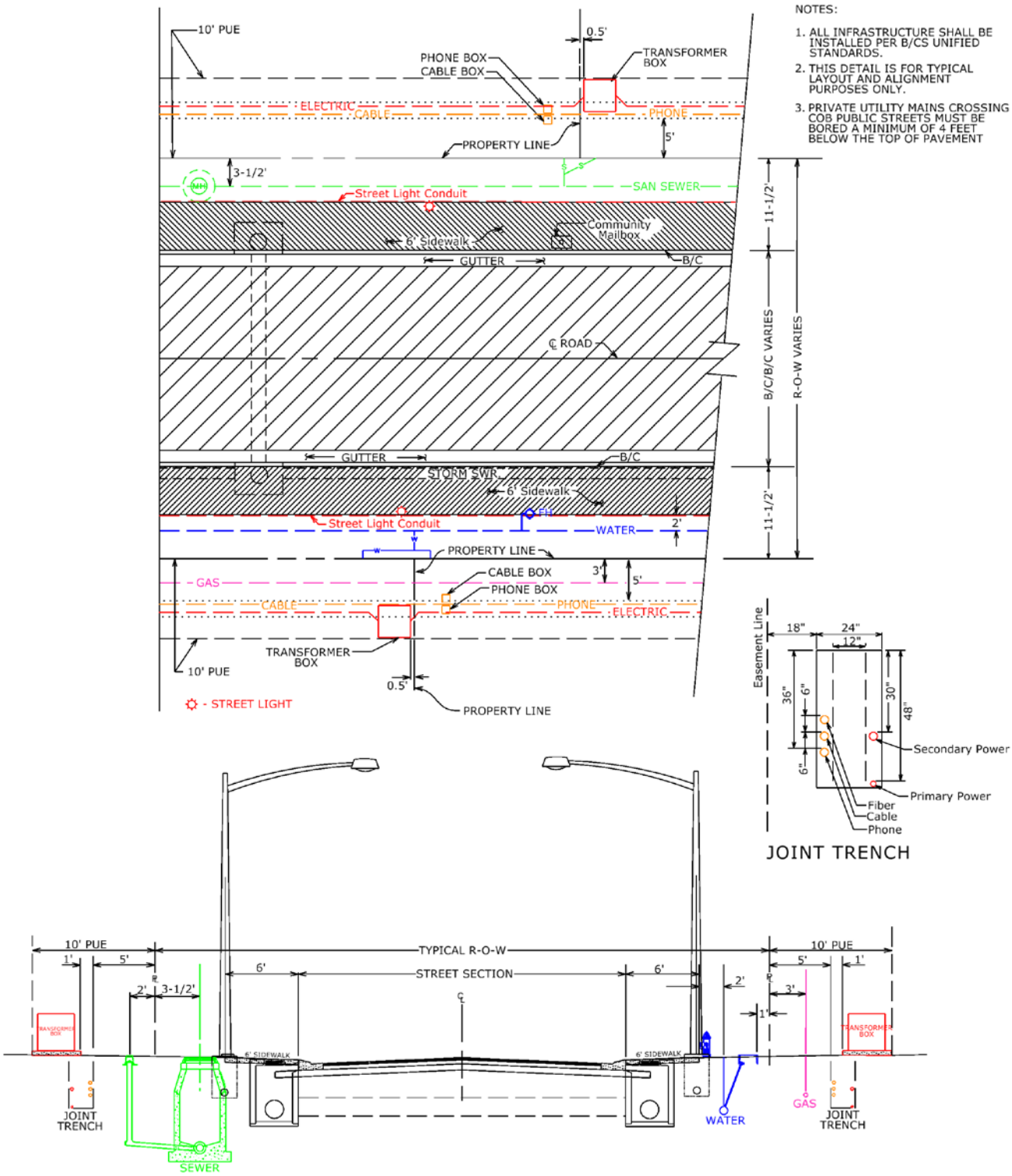

UTILITY LOCATION W/ STD CURB INLET
10' PUE - ALL UTILITIES OUTSIDE OF ROAD